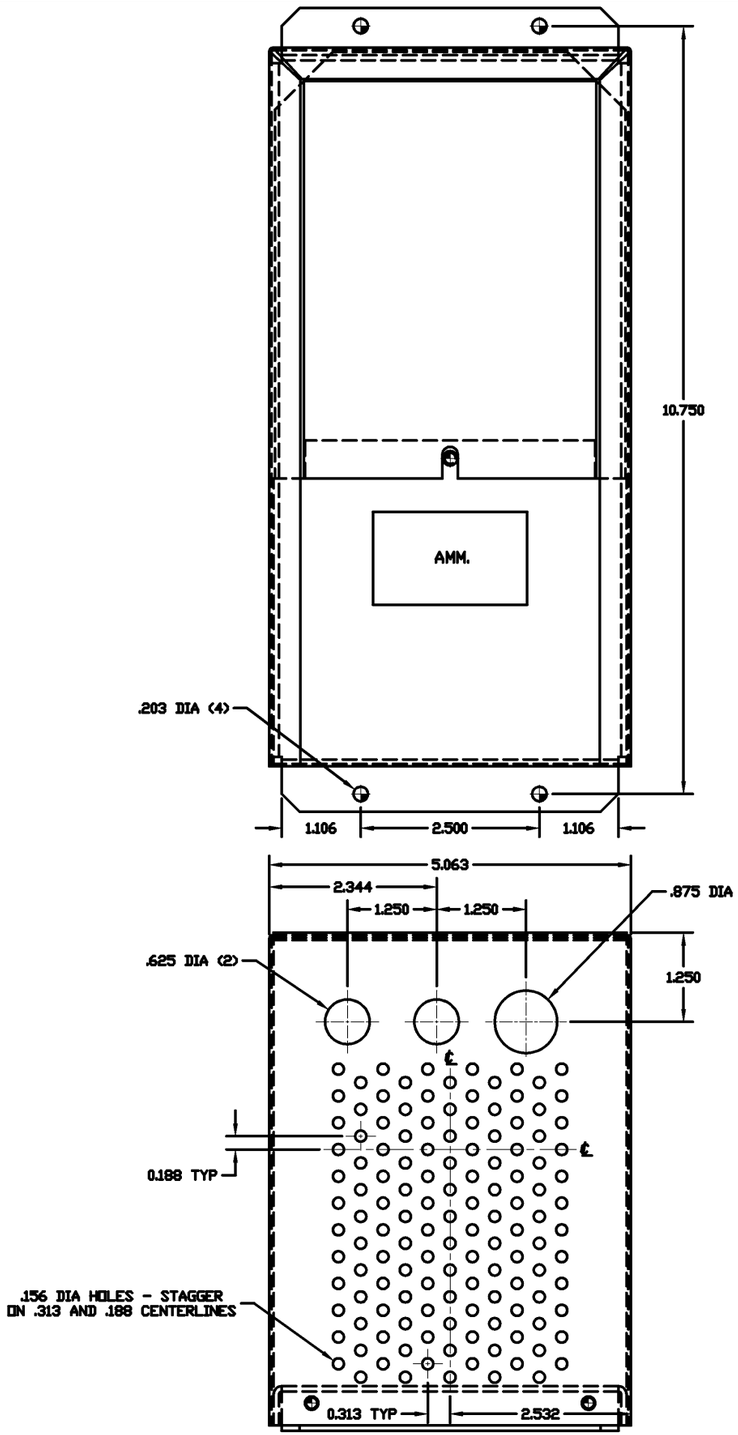

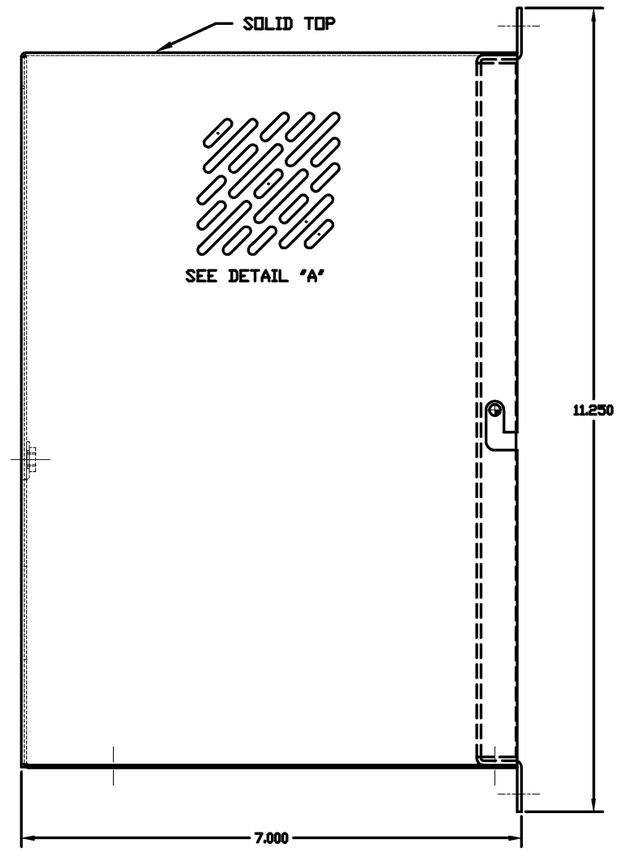

NOTES:

1. MATERIAL: 20GA SHEET STEEL, EXCEPT BASE: 16GA SHEET STEEL.
2. ALL DIMENSIONS GIVEN IN INCHES.
3. FINISH : ANSI-61 GRAY

Rev Description	By	Chk	App	Rev Date	Rev Iss Date	ECN No

MOUNTING DIMENSIONS FOR
MODEL #02 CASE

La MARCHE
106 Bradrock Drive Des Plaines, Illinois U.S.A. 60018

Dwg By	CVD	App By	RRS	App By	TED
Dwg Date	03-18-05	Iss Date	06-10-05	Scale	NOTED
Sheet 1 of 1	Size B	Dwg No	D02-4		